e-ISSN: 2455-667X

Annals of Natural Sciences
(Peer Reviewed and UGC Approved International Journal)
Vol. 3(3), September 2017: 81-89
Journal's URL: http://www.crsdindia.com/ans.html
Email: crsdindia@gmail.com

Annals of Natural Sciences

ORIGINAL ARTICLE

Stochastic Analysis of a Warm Standby Redundant System with Intermittently Repair Facility and Helping Unit

Sandeep Kumar
Department of Statistics, Agra College, Agra, India
Email: drsandeepkmr1980@gmail.com

ABSTRACT

The present paper deals with the stochastic analysis of a system in which after each repair of failed unit, the repaired unit is sent for "final trial" before sending it for operation. Using regenerative point technique with Markov renewal process, the some of the reliability characteristics of interest are obtained.

Key words: *Delayed Activation, final trial, reliability, Markov Renewal process, Regenerative point process.*

Received: 9th July 2017, Revised: 19th August 2017, Accepted: 21st August 2017

How to cite this article:
Kumar S. (2017): Stochastic Analysis of a Warm Standby Redundant System with Intermittently Repair Facility and Helping Unit. Annals of Natural Sciences, Vol. 3[3]: September, 2017: 81-89.

INTRODUCTION

Various researchers including [……] working in the field of reliability have analysed many engineering systems by using two units in which one of the unit is operative and the other as cold standby. But the role of helping unit in the system is very important to make the system in operating position. The system can not operate without helping unit. The example of such type of system is battery in a four wheeler.

Keeping the above view, we in this chapter analysed a two unit warm standby system with helping unit and automatic switch which is used to convert standby unit into operative at the time of failure of an operative unit. In this system it is assumed that the helping unit and automatic switch are not repairable, these are only replaceable.

Using regenerative point technique with Markov renewal process, the following reliability characteristics of interest are obtained.

1. Transition and steady state transition probabilities
2. Mean Sojourn times in various states
3. Mean time to system failure (MTSF)
4. Point wise and Steady state availability of the system
5. Expected Busy period of the repairman in (0,t]
6. Expected number of visits by the repairman in (0,t]

MODEL DESCRIPTION AND ASSUMPTIONS

1. The system consists of two identical units in parallel configuration. Initially one unit is operative and the other is kept as warm standby.
2. Upon failure of an operative unit the warm standby becomes operative instantaneously by the help of an automatic switch. The probability that switch will be in good position at the time of need is fixed and known. The switch is not repairable, it can only replace by the new one.

3. There is a helping unit in the system which is used to make the system in the operating position. If the helping unit fails the whole system ceases. The helping unit is not repairable, it can only replace by the new one and it gets priority in replacement.
4. A single repair facility is available intermittently whenever needed. There is a possibility that the repair facility is busy in some other pre-occupation at the time of need and the failed unit has to wait for some time. Once the repairman enters into the system it will attend all the jobs i.e. repair and replacement both.
5. The failure time distributions of operative, warm standby and helping units are exponential with different parameters while the distribution of repair time of units, replacement time for helping unit and automatic switch are arbitrary. Also the availability time for repair facility at the time of need follows arbitrary distribution.

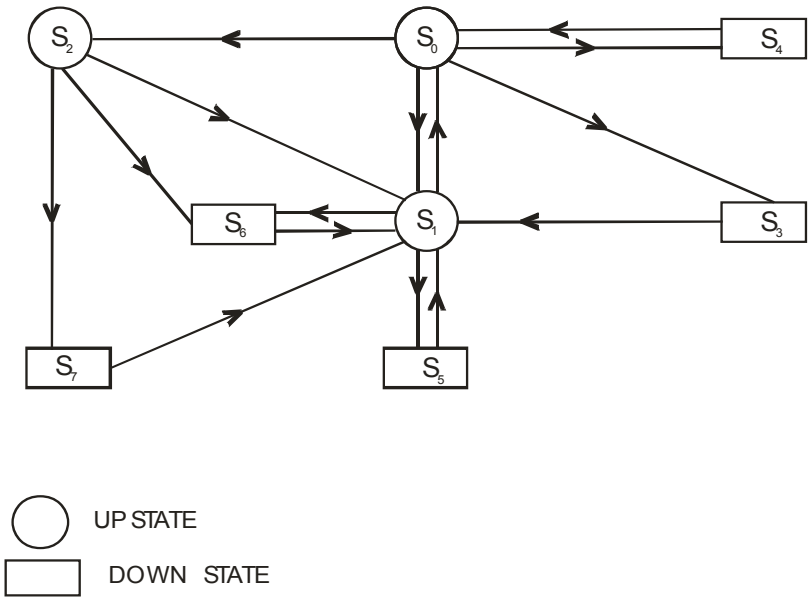

Fig. 1: The transitions between the various states

NOTATION AND SYMBOLS

N_O	:	Normal unit kept as operative
N_{WS}	:	Normal unit kept as warm standby
F_r	:	Failed unit under repair
F_R	:	Repair of failed unit is continued from earlier state
F_{wr}	:	Failed unit is waiting for repair
H_g	:	Helping unit in good position
H_{rep}	:	Helping unit under replacement
AS_{rep}	:	Automatic switch under replacement
α	:	Constant failure rate of operative unit
β	:	Constant failure rate of warm standby unit
γ	:	Constant failure rate of helping unit
f(.), F(.)	:	pdf and cdf of time to complete replacement of automatic switch
$g_1(.)$, $G_1(.)$	:	pdf and cdf of time to complete repair of the failed unit
$g_2(.)$, $G_2(.)$	:	pdf and cdf of time taken by repair facility to become available
h(.), H(.)	:	pdf and cdf of time to complete replacement of failed helping unit by the new one
p(=1-q)	:	Probability that automatic switch operates successfully at the time of need
b(=1-a)	:	Probability that repair facility is available at the time of need
m_1	:	Mean time to repair a unit = $\int_0^\infty t.g_1(t)\,dt$

m_2 : Mean time to replace failed helping unit = $\int_0^\infty t.h(t)\,dt$

m_3 : Mean time to replace automatic switch = $\int_0^\infty t.f(t)dt$

Using the above notation and symbols the possible states of the system are

Up States

$S_0 \equiv (N_O, N_{WS}, H_g)$ $S_1 \equiv (N_O, F_r, H_g)$

$S_2 \equiv (N_O, F_{wr}, H_g)$

Down States

$S_3 \equiv (N_O, F_{wr}, H_g, AS_{rep})$ $S_4 \equiv (N_O, N_{WS}, H_{rep})$

$S_5 \equiv (F_R, F_{wr}, H_g)$ $S_6 \equiv (N_O, N_{wr}, H_{rep})$

$S_7 \equiv (F_r, F_{wr}, H_g)$

TRANSITION PROBABILITIES

Let T_0 (=0), $T_1, T_2, \ldots$ be the epochs at which the system enters the states $S_i \in E$. Let X_n denotes the state entered at epoch T_{n+1} i.e. just after the transition of T_n. Then $\{T_n, X_n\}$ constitutes a Markov-renewal process with state space E and

$Q_{ik}(t) = Pr[X_{n+1} = S_k, T_{n+1} - T_n \le t \mid X_n = S_i]$ .....(1)

is semi Markov-Kernal over E. The stochastic matrix of the embedded Markov chain is

$P = p_{ik} = \lim_{t\to\infty} Q_{ik}(t) = Q(\infty)$ .....(2)

By simple probabilistic consideration, the non-zero elements of $Q_{ik}(t)$ are:

$$Q_{01}(t) = b.\int_0^t (\beta+\alpha p)e^{-(\alpha+\beta+\gamma)u}\,du = b.\frac{\beta+\alpha.p}{\alpha+\beta+\gamma}[1 - e^{-(\alpha+\beta+\gamma)t}]$$

$$Q_{02}(t) = a.\int_0^t (\beta+\alpha p)e^{-(\alpha+\beta+\gamma)u}\,du = a.\frac{\beta+\alpha.p}{\alpha+\beta+\gamma}[1 - e^{-(\alpha+\beta+\gamma)t}]$$

$$Q_{03}(t) = \alpha q.\int_0^t e^{-(\alpha+\beta+\gamma)u}\,du = q.\frac{\alpha}{\alpha+\beta+\gamma}[1 - e^{-(\alpha+\beta+\gamma)t}]$$

$$Q_{04}(t) = \gamma.\int_0^t e^{-(\alpha+\beta+\gamma)u}\,du = \frac{\gamma}{\alpha+\beta+\gamma}[1 - e^{-(\alpha+\beta+\gamma)t}]$$

$$Q_{10}(t) = \int_0^t e^{-(\alpha+\gamma)u}\,g_1(u)\,du$$

$$Q_{15}(t) = \frac{\alpha}{\alpha+\gamma}.[1 - e^{-(\alpha+\gamma)t}] - \alpha.\int_0^t e^{-(\alpha+\gamma)u}\,G_1(u)\,du$$

$$Q_{16}(t) = \frac{\gamma}{\alpha+\gamma}.[1 - e^{-(\alpha+\gamma)t}] - \gamma.\int_0^t e^{-(\alpha+\gamma)u}\,G_1(u)\,du$$

$$Q_{21}(t) = \int_0^t e^{-(\alpha+\gamma)u}\,g_2(u)\,du$$

$$Q_{26}(t) = \frac{\gamma}{\alpha+\gamma}.[1 - e^{-(\alpha+\gamma)t}] - \gamma.\int_0^t e^{-(\alpha+\gamma)u}\,G_2(u)\,du$$

$$Q_{27}(t) = \frac{\alpha}{\alpha+\gamma}.[1 - e^{-(\alpha+\gamma)t}] - \alpha.\int_0^t e^{-(\alpha+\gamma)u}\,G_2(u)\,du$$

$Q_{31}(t) = \int_0^t g(u)\,du$ $Q_{40}(t) = \int_0^t h(u)\,du$

$Q_{61}(t) = \int_0^t h(u)\,du$ $Q_{71}(t) = \int_0^t g_1(u)\,du$

$$Q^{(5)}{}_{11}(t) = \frac{\alpha}{\alpha+\gamma}.[\int_0^t g_1(u)\,du - \int_0^t e^{-(\alpha+\gamma)u}\,g_1(u)\,du] \quad \text{.....(3-16)}$$

Taking limit as $t \to \infty$, the steady state transition p_{ij} can be obtained from (2-16) . Thus

$p_{ik} = \lim Q_{ik}(t)$ .....(17)

$t \to \infty$

$p_{01} = b.\dfrac{\beta + \alpha.p}{\alpha + \beta + \gamma}$ $\qquad$ $p_{02} = a.\dfrac{\beta + \alpha.p}{\alpha + \beta + \gamma}$

$p_{03} = q.\dfrac{\alpha}{\alpha + \beta + \gamma}$ $\qquad$ $p_{04} = \dfrac{\gamma}{\alpha + \beta + \gamma}$

$p_{10} = g^*_1(\alpha+\gamma)$ $\qquad$ $p_{15} = \dfrac{\alpha}{\alpha + \gamma}.[1 - g^*_1(\alpha+\gamma)]$

$p_{16} = \dfrac{\gamma}{\alpha + \gamma}.[1 - g^*_1(\alpha+\gamma)]$ $\qquad$ $p_{21} = g^*_2(\alpha+\gamma)$

$p_{26} = \dfrac{\gamma}{\alpha + \gamma}.[1 - g^*_2(\alpha+\gamma)]$ $\qquad$ $p_{27} = \dfrac{\alpha}{\alpha + \gamma}.[1 - g^*_2(\alpha+\gamma)]$

$p^{(5)}_{11} = \dfrac{\alpha}{\alpha + \gamma}.[1 - g^*_1(\alpha+\gamma)]$ .....(18-29)

From the above probabilities the following relation can be easily verifies as;

$p_{01} + p_{02} + p_{03} + p_{04} = 1$ $\qquad$ $p_{10} + p^{(5)}_{11} + p_{16} = 1$

$p_{21} + p_{26} + p_{27} = 1$ $\qquad$ $p_{31} = p_{40} = p_{61} = p_{71} = 1$ .....(30-33)

MEAN SOJOURN TIMES

The mean time taken by the system in a particular state S_i before transiting to any other state is known as mean sojourn time and is defined as

$\mu_i = {}_0\int^{\infty} P[T>t]\, dt$ .....(34)

Where T is the time of stay in state S_i by the system.

To calculate mean sojourn time μ_I in state S_i, we assume that so long as the system is in state S_i, it will not transit to any other state. Therefore;

$\mu_0 = \dfrac{1}{\alpha + \beta + \gamma}$ $\qquad$ $\mu_1 = \dfrac{1}{\alpha + \gamma}.[1 - g^*_1(\alpha+\gamma)]$

$\mu_2 = \dfrac{1}{\alpha + \gamma}.[1 - g^*_2(\alpha+\gamma)]$ $\qquad$ $\mu_3 = {}_0\int^{\infty} t.f(t)\, dt = m_3$

$\mu_4 = {}_0\int^{\infty} t.h(t)\, dt = m_2$ $\qquad$ $\mu_6 = {}_0\int^{\infty} t.h(t)\, dt = m_2$

$\mu_7 = {}_0\int^{\infty} t.g_1(t)\, dt = m_1$ .....(35-41)

CONTRIBUTION TO MEAN SOJOURN TIME

For the contribution to mean sojourn time in state $S_i \in E$ and non-regenerative state occurs, before transiting to $S_j \in E$, i.e.,

$m_{ij} = {}_0\int^{\infty} t.q_{ij}(t)\, dt = -q'^*_{ij}(0)$ .....(42)

Therefore,

$m_{01} = b.\,{}_0\int^{\infty} t.(\beta+\alpha p)e^{-(\alpha+\beta+\gamma)t}\, dt = b.\dfrac{\beta + \alpha.p}{(\alpha + \beta + \gamma)^2}$

$m_{02} = a.\,{}_0\int^{\infty} t.(\beta+\alpha p)e^{-(\alpha+\beta+\gamma)t}\, dt = a.\dfrac{\beta + \alpha.p}{(\alpha + \beta + \gamma)^2}$

$m_{03} = \alpha q.\,{}_0\int^{\infty} t.e^{-(\alpha+\beta+\gamma)t}\, dt = q.\dfrac{\alpha}{(\alpha + \beta + \gamma)^2}$

$m_{04} = \gamma.\,{}_0\int^{\infty} t.e^{-(\alpha+\beta+\gamma)t}\, dt = \dfrac{\gamma}{(\alpha + \beta + \gamma)^2}$

$m_{10} = {}_0\int^{\infty} t.e^{-(\alpha+\gamma)t} g_1(t)\, dt$ $\qquad$ $m_{15} = \alpha.{}_0\int^{\infty} t.e^{-(\alpha+\gamma)t} \overline{G}_1(t)\, dt$

$m_{16} = \gamma.{}_0\int^{\infty} t.e^{-(\alpha+\gamma)t} \overline{G}_1(t)\, dt$ $\qquad$ $m_{21} = {}_0\int^{\infty} t.e^{-(\alpha+\gamma)t} \overline{G}_2(t)\, dt$

$m_{26} = \gamma.{}_0\int^{\infty} t.e^{-(\alpha+\gamma)t} \overline{G}_2(t)\, dt$ $\qquad$ $m_{27} = \alpha.{}_0\int^{\infty} t.e^{-(\alpha+\gamma)t} \overline{G}_2(t)\, dt$

$m_{31} = {}_0\int^{\infty} t.f(t)\, dt$ $\qquad$ $m_{40} = {}_0\int^{\infty} t.h(t)\, dt$

$m_{61} = {}_0\int^{\infty} t.h(t)\, dt$ $\qquad$ $m_{71} = {}_0\int^{\infty} t.g_1(t)\, dt$

$$m^{(5)}_{11} = \frac{\alpha}{\alpha+\gamma}.[{}_0\int^{\infty} t.g_1(t)\, dt - {}_0\int^{\infty} t.e^{-(\alpha+\gamma)t} g_1(t)\, dt] \qquad \text{.....(43-57)}$$

By the above expressions, it can be easily verified that

$$m_{01} + m_{02} + m_{03} + m_{04} = \frac{1}{\alpha+\beta+\gamma} = \mu_0$$

$$m_{01} + m_{02} = \frac{1}{\alpha+\gamma}.[1 - g^*_1(\alpha+\gamma)] = \mu_1$$

$$m_{21} + m_{26} + m_{27} = \frac{1}{\alpha+\gamma}.[1 - g^*_2(\alpha+\gamma)] = \mu_2$$

$$m_{10} + m^{(5)}_{11} + m_{16} = \frac{\alpha.p}{(\alpha+\gamma)} + \frac{\gamma}{(\alpha+\gamma)^2}[1 - g^*_1(\alpha+\gamma)]$$

$m_{31} = \mu_3$ $\qquad$ $m_{40} = \mu_4$ $\qquad$ $m_{61} = \mu_6$ $\qquad$ $m_{71} = \mu_7$ $\qquad$ .....(58-65)

MEAN TIME TO SYSTEM FAILURE (MTSF)

To obtain the distribution function $\pi_i(t)$ of the time to system failure with starting state S_0.

$\pi_0(t) = Q_{01}(t)\$\pi_1(t) + Q_{02}(t)\$\pi_2(t) + Q_{03}(t) + Q_{04}(t)$

$\pi_1(t) = Q_{10}(t)\$\pi_0(t) + Q_{15}(t) + Q_{16}(t)$

$\pi_2(t) = Q_{21}(t)\$\pi_1(t)\ Q_{26}(t) + Q_{27}(t)$ $\qquad$ .....(66-68)

Taking Laplace Stieltjes transform of relations (66-68), we get

$$\tilde{\pi}_0(s) = \tilde{Q}_{01}(s).\tilde{\pi}_1(s) + \tilde{Q}_{02}(s).\tilde{\pi}_2(s) + \tilde{Q}_{03}(s) + \tilde{Q}_{04}(s)$$

$$\tilde{\pi}_1(s) = \tilde{Q}_{10}(s).\tilde{\pi}_0(s) + \tilde{Q}_{15}(s) + \tilde{Q}_{16}(s)$$

$$\tilde{\pi}_2(s) = \tilde{Q}_{21}(s).\tilde{\pi}_1(s) + \tilde{Q}_{26}(s) + \tilde{Q}_{27}(s) \qquad \text{.....(69-71)}$$

and solving the above equations (69-71) for $\tilde{\pi}_0(s)$ by omitting the argument 's' for brevity, we get

$$\tilde{\pi}_0(s) = N_1(s)/\ D_1(s) \qquad \text{.....(72)}$$

where

$$N_1(s) = \tilde{Q}_{03} + \tilde{Q}_{04} + \tilde{Q}_{01}(\tilde{Q}_{15} + \tilde{Q}_{16}) + \tilde{Q}_{02}(\tilde{Q}_{26} + \tilde{Q}_{27}) + \tilde{Q}_{02}\tilde{Q}_{21}(\tilde{Q}_{15} + \tilde{Q}_{16}) \qquad \text{.....(73)}$$

and

$$D_1(s) = 1 - \tilde{Q}_{01}\tilde{Q}_{10} - \tilde{Q}_{10}\tilde{Q}_{21}\tilde{Q}_{02} \qquad \text{.....(74)}$$

By taking the limit $s \to 0$ in equation (72), one gets $\tilde{\pi}_0(0) = 1$, which implies that $\tilde{\pi}_0(t)$ is a proper distribution function. Therefore, mean time to system failure when the initial state is S_0, is

$$E(T) = -\frac{d}{ds}\pi_0(s)|_{s=0} = \frac{D'_1(0) - N'_1(0)}{D_1(0)} = N_1/D_1 \qquad \text{.....(75)}$$

where

$$N_1 = \mu_0 + p_{01}\mu_1 + p_{02}\mu_2 + p_{02}p_{21}\mu_1$$
$$= \alpha q + \gamma + (\alpha p + \beta)[1 - g^*_1(\alpha+\gamma) + \{1 - g^*_1(\alpha+\gamma)\}\{1 - g^*_1(\alpha+\gamma)\}a + \alpha p \qquad \text{.....(76)}$$

and

$$D_1 = 1 - p_{01}p_{10} - p_{10}p_{21}p_{02}$$
$$= \alpha q + \gamma + (\alpha p + \beta)[1 - g^*_1(\alpha+\gamma) + \{1 - g^*_1(\alpha+\gamma)\}\{1 - g^*_1(\alpha+\gamma)\}a \qquad \text{.....(77)}$$

AVAILABILITY ANALYSIS

System availability is defined as

$A_i(t)$ = Pr[Starting from state S_i the system is available at epoch t without passing through any regenerative state]

and

$M_i(t)$ = Pr[Starting from up state S_i the system remains up till epoch t without passing through any regenerative up state]

Thus,

$$M_0(t) = e^{-(\alpha+\beta+\gamma)t} \qquad M_1(t) = e^{-(\alpha+\gamma)t}\overline{G}_1(t)$$
$$M_2(t) = e^{-(\alpha+\gamma)t}\overline{G}_2(t) \qquad M_3(t) = e^{-(\beta+\gamma)t}\overline{F}(t) \qquad \text{.....(78-81)}$$

Now, obtaining $A_i(t)$ by using elementary probability argument;

$$A_0(t) = M_0(t) + q_{01}(t)©A_1(t) + q_{02}(t)©A_2(t) + q_{03}(t)©A_3(t) + q_{04}(t)©A_4(t)$$
$$A_1(t) = M_1(t) + q_{10}(t)©A_0(t) + q^{(5)}_{11}(t)©A_1(t) + q_{16}(t)©A_6(t)$$
$$A_2(t) = M_2(t) + q_{21}(t)©A_1(t) + q_{26}(t)©A_6(t) + q_{27}(t)©A_7(t)$$
$$A_3(t) = q_{31}(t)©A_1(t) \qquad A_4(t) = q_{40}(t)©A_0(t)$$
$$A_6(t) = q_{61}(t)©A_1(t) \qquad A_7(t) = q_{71}(t)©A_1(t) \qquad \text{.....(82-88)}$$

Taking Laplace transform of above equation (82-88), we get,

$$A^*_0(s) = M^*_0(s) + q^*_{01}(s).A^*_1(s) + q^*_{02}(s).A^*_2(s) + q^*_{03}(s).A^*_3(s) + q^*_{04}(s).A^*_4(s)$$
$$A^*_1(s) = M^*_1(s) + q^*_{10}(s).A^*_0(s) + q^{*(5)}_{11}(s).A^*_1(s) + q^*_{16}(s).A^*_6(s)$$
$$A^*_2(s) = M^*_2(s) + q^*_{21}(s).A^*_1(s) + q^*_{26}(s).A^*_6(s) + q^*_{27}(s).A^*_7(s)$$
$$A^*_3(s) = q^*_{31}(s).A^*_1(s) \qquad A^*_4(s) = q^*_{40}(s).A^*_0(s)$$
$$A^*_6(s) = q^*_{61}(s).A^*_1(s) \qquad A^*_7(s) = q^*_{71}(s).A^*_1(s) \qquad \text{.....(89-95)}$$

Now, solving the equations (89-95) for point wise availability $A^*_0(s)$, by omitting the arguments 's' for brevity, one gets

$$A^*_0(s) = \frac{N_2(s)}{D_2(s)} \qquad \text{.....(96)}$$

Where

$$N_2(s) = (1 - q^{*(5)}_{11} - q^*_{61}q^*_{61})M^*_0 + (q^*_{01} + q^*_{31}q^*_{03} + q^*_{02}q^*_{21} + q^*_{27}q^*_{71} - q^*_{02}q^*_{26}q^*_{61})M^*_1 + (1 - q^{*(5)}_{11} - q^*_{61}q^*_{16})q^*_{02}M^*_2 \qquad \text{.....(97)}$$

and

$$D_2(s) = 1 - q^{*(5)}_{11} - (1 - q^{*(5)}_{11} - q^*_{61}q^*_{16})q^*_{04}q^*_{40} - q^*_{61}q^*_{16} - q^*_{01}q^*_{10} - q^*_{03}q^*_{31}q^*_{01} - (q^*_{21} + q^*_{27}q^*_{71} + q^*_{26}q^*_{61})q^*_{02}q^*_{10} \qquad \text{.....(98)}$$

By taking the limit $s \to 0$ in the relation (98), one gets the value of $D_2(0) = 0$, therefore the steady state availability of the system when it starts operations from S_0 is

$$A_0(\infty) = \lim_{t\to\infty} A_0(t) = \lim_{s\to 0} s.\, A_0^*(s) = N_2(0)/D'_2(0) = N_2/D_2 \qquad .....(99)$$

Now, to find $N_2(0)$ we note that

$$M^*_0(0) = \int_0^\infty e^{-(\alpha+\beta+\gamma)t}\, dt = \mu_0$$
$$M^*_1(0) = \int_0^\infty e^{-(\alpha+\gamma)t}\, \overline{G}_1(t)\, dt = \mu_1$$
$$M^*_2(0) = \int_0^\infty e^{-(\alpha+\gamma)t}\, \overline{G}_2(t)\, dt = \mu_2$$
$$M^*_3(0) = \int_0^\infty e^{-(\beta+\gamma)t}\, \overline{F}(t)\, dt = \mu_3 \qquad .....(100\text{-}103)$$

Hence, using (18-29), (35-41) and (100-103), we get

$$N_2 = \mu_0 p_{04} + (1 - p_{04})\mu_1 + p_{10}p_{02}\mu_2$$
$$= \alpha + \beta[1 - g^*_1(\alpha+\gamma)] + g^*_1(\alpha+\gamma)[\gamma + b(\alpha p + \beta)\{1 - g^*_2(\alpha+\gamma)\}] \qquad .....(104)$$

and

$$D_2 = p_{10}(m_{01} + m_{03} + m_{03} + m_{04}) + (1 - p_{04}(m_{01} + m_{16} + m^{(5)}_{11})$$
$$+ p_{02}p_{10}(m_{21} + m_{26} + m_{27}) + p_{10}p_{03}m_{31} + [1 - p_{16} - p^{(5)}_{11}]p_{04}m_{40}$$
$$+ (p_{16} - p_{04}p_{16} + p_{02}p_{16}p_{26})m_{61} + p_{02}p_{10}p_{27}m_{71}$$
$$= [(\alpha + \gamma)g^*_1(\alpha+\gamma)\{(\alpha + \gamma)(1 - \alpha p m_3 + \gamma m_2)$$
$$+ a(\alpha p + \beta)\{1 - g^*_2(\alpha+\gamma)\}(1 + \gamma m_2 + \alpha m_1)\}$$
$$+ (\alpha + \beta)\{\gamma(1 - g^*_1(\alpha+\gamma)(1 + (\alpha + \gamma)\alpha m_2) + \alpha(\alpha\, \gamma)m_1\}] \qquad .....(105)$$

BUSY PERIOD ANANLYSIS

Let us define $W_i(t)$ as the probability that the system is under repair by repair facility in state $S_i \varepsilon E$ at time t without transiting to any regenerative state. Therefore

$$W_1(t) = e^{-(\alpha+\gamma)t}\, \overline{G}_1(t) \qquad W_3(t) = \overline{F}(t) \quad W_4(t) = \overline{H}(t)$$
$$W_6(t) = \overline{H}(t) \qquad W_7(t) = \overline{G}_1(t) \qquad .....(106\text{-}110)$$

Also let $B_i(t)$ is the probability that the system is under repair by repair facility at time t, Thus the following recursive relations among $B_i(t)$'s can be obtained as ;

$$B_0(t) = q_{01}(t)©B_1(t) + q_{02}(t)©B_2(t) + q_{03}(t)©B_3(t) + q_{04}(t)©B_4(t)$$
$$B_1(t) = W_1(t) + q_{10}(t)©B_0(t) + q^{(5)}_{11}(t)©B_1(t) + q_{16}(t)©B_6(t)$$
$$B_2(t) = q_{21}(t)©B_1(t) + q_{26}(t)©B_6(t) + q_{27}(t)©B_7(t)$$
$$B_3(t) = W_3(t) + q_{31}(t)©B_1(t)$$
$$B_4(t) = W_4(t) + q_{40}(t)©B_0(t)$$
$$B_6(t) = W_6(t) + q_{61}(t)©B_1(t)$$
$$B_7(t) = W_7(t) + q_{71}(t)©B_1(t) \qquad .....(111\text{-}117)$$

Taking Laplace transform of the equations (111-117), we get

$$B^*_0(s) = q^*_{01}(s).B^*_1(s) + q^*_{02}(s).B^*_2(s) + q^*_{03}(s).B^*_3(s) + q^*_{04}(s).B^*_4(s)$$
$$B^*_1(s) = W^*_1(s) + q^*_{10}(s).B^*_0(s) + q^{*(5)}_{11}(s).B^*_1(s) + q^*_{16}(s).B^*_6(s)$$
$$B^*_2(s) = q^*_{21}(s).B^*_1(s) + q^*_{26}(s).B^*_6(s) + q^*_{27}(s).B^*_7(s)$$
$$B^*_3(s) = W^*_3(s) + q^*_{31}(s).B^*_1(s)$$
$$B^*_4(s) = W^*_4(s) + q^*_{40}(s).B^*_0(s)$$
$$B^*_6(s) = W^*_6(s) + q^*_{61}(s).B^*_1(s)$$
$$B^*_7(s) = W^*_7(s) + q^*_{71}(s).B^*_1(s) \qquad .....(118\text{-}124)$$

and solving equations (118-124) for $B^*_0(s)$, by omitting the argument 's' for brevity we get;

$$B^*_0(s) = N_3(s)/D_3(s) \qquad .....(125)$$

Where $D_3(s)$ is same as $D_2(s)$ in (98) and

$$N_3(s) = -(1 - q^{*(5)}_{11} - q^*_{16}q^*_{61})\{1 - q^*(\alpha+\beta+s)\}/(\alpha+\beta+s)$$
$$+ (1 - q^{*(5)}_{11} - q^*_{16}q^*_{61})\{q^*_{03}\, \overline{F}^*(s) - q^*_{04}\, \overline{H}^*(s)$$

$+ q^*_{02}q^*_{26}\overline{H}^*(s) - q^*_{02}q^*_{27}\overline{G}^*_1(s)\}$ .....(126)

In this steady state, the fraction of time for which the repair facility is busy in repair is given by

$$B_0 = \lim_{t\to\infty} B_0(t) = \lim_{s\to 0} s\,B^*(s) = N_3(0)/D'_3(0) = N_3/D_3 \quad .....(127)$$

where D_3 is same as D_2 in (105) and

$$N_3 = g_1^*(\alpha+\gamma)[\alpha p(\alpha+\gamma)m_3 - \gamma(\alpha+\gamma)m_2 + \alpha(\gamma m_2 - \alpha m_1)b(\beta+\alpha p) .\{1 - g^*_2(\alpha+\gamma)\} - (\alpha+\beta+\gamma)\{1 - g^*_2(\alpha+\gamma)\}] \quad .....(128)$$

Expected number of visits by the Repair facility

Let we define, $V_i(t)$ as the expected number of visits by the repair facility in (0,t] given that the system initially started from regenerative state S_i at t=0. Then following recurrence relations among $V_i(t)$'s can be obtained as;

$$V_0(t) = Q_{01}(t)\$[1 + V_1(t)] + Q_{02}(t)\$V_2(t) + Q_{03}(t)\$[1 + V_3(t)] + Q_{04}(t)\$[1 + V_4(t)]$$

$$V_1(t) = Q_{10}(t)\$V_0(t) + Q^{(5)}_{11}(t)\$V_1(t) + Q_{16}(t)\$V_6(t)$$

$$V_2(t) = Q_{21}(t)\$[1 + V_1(t)] + Q_{26}(t)\$V_6(t) + Q_{27}(t)\$[1 + V_7(t)]$$

$$V_3(t) = Q_{31}(t)\$V_1(t) \qquad V_4(t) = Q_{40}(t)\$V_0(t)$$

$$V_6(t) = Q_{61}(t)\$V_1(t) \qquad V_7(t) = Q_{71}(t)\$V_1(t) \quad .....(129\text{-}135)$$

Taking Laplace stieltjes transform of the above equations (129-135) we get

$$\tilde{V}_0(s) = \tilde{Q}_{01}(s).[1 + \tilde{V}_1(s)] + \tilde{Q}_{02}(s).\tilde{V}_2(s) + \tilde{Q}_{03}(s).[1 + \tilde{V}_3(s)] + \tilde{Q}_{04}(s).[1 + \tilde{V}_4(s)]$$

$$\tilde{V}_1(s) = \tilde{Q}_{10}(s).\tilde{V}_0(s) + \tilde{Q}^{(5)}_{11}(s).\tilde{V}_1(s) + \tilde{Q}_{16}(s).\tilde{V}_6(s)$$

$$\tilde{V}_2(s) = \tilde{Q}_{21}(s).[1 + \tilde{V}_1(s)] + \tilde{Q}_{26}(s).\tilde{V}_6(s) + \tilde{Q}_{27}(s).[1 + \tilde{V}_7(s)]$$

$$\tilde{V}_3(s) = \tilde{Q}_{31}(s).\tilde{V}_1(s) \qquad \tilde{V}_4(s) = \tilde{Q}_{40}(s).\tilde{V}_0(s)$$

$$\tilde{V}_6(s) = \tilde{Q}_{61}(s).\tilde{V}_1(s) \quad \tilde{V}_7(s) = \tilde{Q}_{71}(s).\tilde{V}_1(s) \quad .....(136\text{-}142)$$

and solving the equations (136-142) for $\tilde{V}_0(s)$ by omitting the argument 's' for brevity is

$$\tilde{V}_0(s) = N_4(s)/D_4(s) \quad .....(143)$$

where

$$N_4(s) = (\tilde{Q}_{01} + \tilde{Q}_{02} + \tilde{Q}_{04})(1 - \tilde{Q}^{(5)}_{11} - \tilde{Q}_{16}\tilde{Q}_{61}) + \tilde{Q}_{02}(\tilde{Q}_{21} + \tilde{Q}_{26} + \tilde{Q}_{27})(1 - \tilde{Q}^{(5)}_{11} - \tilde{Q}_{16}\tilde{Q}_{61}) \quad .....(144)$$

and

$$D_4(s) = 1 - \tilde{Q}^{(5)}_{11} - (1 - \tilde{Q}^{(5)}_{11} - \tilde{Q}_{61}\tilde{Q}_{16})\tilde{Q}_{04}\tilde{Q}_{40} - \tilde{Q}_{61}\tilde{Q}_{16}$$

$$- \tilde{Q}_{01}\tilde{Q}_{10} - \tilde{Q}_{03}\tilde{Q}_{31}\tilde{Q}_{01} - (\tilde{Q}_{21} + \tilde{Q}_{27}\tilde{Q}_{71} + \tilde{Q}_{26}\tilde{Q}_{61})\ \tilde{Q}_{02}\tilde{Q}_{10} \qquad \text{.....(145)}$$

In steady state the number of visit per unit of time when the system starts after entrance into state S_0 is ;

$$V_0 = \lim_{t \to \infty} [V_0(t)/t] = \lim_{s \to 0} s\,\tilde{V}_0(s) = N_4/D_4 \qquad \text{.....(146)}$$

where D_4 is same as D_2 in (105) and

$$N_4 = (1 - p_{02})p_{10} + p_{02}p_{10}$$
$$= p_{10} = g^*_1(\alpha+\gamma) \qquad \text{.....(147)}$$

REFERENCES

1. Abdul-Nour G., Beaudoin H., Ouellet P., Rochette R. and Lambert S. (1998): A reliability based maintenance policy; A case study, Comput. Indust. Engg., 35(3&4): 591-594.
2. Agarwal Manju and Kumar A. (1981): Analysis of a repairable redundant system with delayed replacement. Microlectron, Reliab. 21: 165-171
3. Agnihotri R.K, Chand S. and Mudgal V.B. (1994): Two unit redundant system with adjustable failure rate, critical human error (C.H.E.) and inspection. Microelectron, Reliab.,34: 1349-1354
4. Agnihotri R.K, Kumar V. and Ansari M.A. (1991): Probabilistic analysis of a two unit redundant system with changable failure and repair rates. DEI Journal of Science and Engineering Research (Accepted for publication).
5. Agnihotri R.K, Kumar V. and Ansari M.A. (1993a): Stochastic analysis of a redundant system with two types of failure. Microlectron, Reliab. 33: 1467-1471.
6. Agnihotri R.K, Kumar V. and Ansari M.A. (1993b): Stochastic analysis of a system operating in a multiple environment. Microlectron, Reliab. 33: 1219-1222.
7. Agnihotri R.K, Satsangi S.K. and Agarwal S.C. (1995): Two non-identical operative unit system with repair and inspection. Microlectron, Reliab. 35: 869-874.
8. Agnihotri R.K, Singhal Govind and Khandelwal S.K. (1992): Stochastic analysis of a two unit redundant system with two types of failure. Microlectron, Reliab. 32: 901-904.
9. Agnihotri R.K, Singhal Govind and Khandelwal S.K. (1992): Two unit redundant system with random shocks and inspection. Microlectron, Reliab. 32: 1431-1441.
10. Agnihotri R.K. and Satsangi S.K. (1995): Analysis of a two unit redundant system with optimum interchangement time. Microlectron, Reliab. 35: 749-750.